New Forest Cube Stove
Installation Manual
&
User Instructions

Revision A – 04/25 | Part Number: F861723

UK

Welcome to British Fires

Table of Contents

Installation manual 1–13

1.0	Important notes	1
2.0	Appliance data	2
4.0	Unpacking the appliance	3
3.0	Component checklist	3
5.0	Site requirements	4
6.0	Appliance plug	4
7.0	Clearances	5
8.0	Preparing the appliance – Installing the Log Store Base	6
8.1	Preparing the appliance – Installing the flue pipe	7–8
8.2	Removing and replacing the front glass	9
8.3	Installing the Deluxe Real Logs	10
9.0	Installation items to note	11
9.1	Installation items – flue & chimney	12
9.2	Overhang requirements	12
10.0	Installation – wall hung	13
	Share your installation on instagram	14

User Instructions 16–29

	User instructions table of contents	16
11.0	Pairing the remote control	17
12.0	Operating the appliance	18–21
12.1	Setting the Weekly Timer	22
13.0	Safety cut-out system	23
14.0	Cleaning and maintenance	23
15.0	Troubleshooting guide	24
16.0	Spare parts	25–26
17.0	Specification sheet	27
18.0	Servicing	28
19.0	Terms & conditions, guarantee	29

1.0 Important notes

These instructions should be read carefully and retained for future reference.

When using this electrical appliance, basic precautions should be followed to reduce the risk of fire, electric shock and injury to person, including the following:

This heater must be used on an AC supply only and the voltage marked on the heater's rating label must correspond to the supply voltage.

DO NOT switch the appliance on until it is properly installed as described in this manual.

This appliance can be used by children aged from eight years and above and persons with reduced physical, sensory or mental capabilities or lack of experience and knowledge if they have been given supervision or instruction concerning use of the appliance in a safe way and understand the hazards involved. Children shall not play with the appliance. Cleaning and user maintenance shall not be made by children without supervision.

Children of less than three years should be kept away unless continuously supervised. Children aged from three years and less than eight years shall only switch on/off the appliance provided that it has been placed or installed in its intended normal operating position and they have been given supervision or instruction concerning use of the appliance in a safe way and understand the hazards involved.

Children aged from three years and less than eight years shall not plug in, regulate and clean the appliance or perform user maintenance.

CAUTION: Some parts of this appliance can become very hot and cause burns. Particular attention has to be given where children and vulnerable people are present.

Check that all parts included are intact and not damaged. If the supply cord is damaged, it must be replaced by the manufacturer, its service agent or similarly qualified persons in order to avoid a hazard. Never use the appliance if the cord or any part of the appliance shows signs of damage. The heater must not be located immediately below a socket-outlet.

DO NOT use this heater in the immediate surroundings of a bath, a shower or a swimming pool.

WARNING: In order to avoid overheating, do not cover the fan of the heater.

DO NOT use this heater with a programmer, timer, separate remote-control system or any other device that switches the heater on automatically, since a fire risk exists if the heater is covered or positioned incorrectly.

CAUTION: In order to avoid a hazard due to inadvertent resetting of the thermal cut-out, this appliance must not be supplied through an external switching device, such as a timer, or connected to a circuit that is regularly switched on and off by the utility.

WARNING: This heater is not equipped with a device to control the room temperature. Do not use this heater in small rooms when they are occupied by persons not capable of leaving the room on their own, unless constant supervision is provided.

Keep furniture, curtains and other fabric material away from appliance.

DO NOT leave appliance unattended during use.

DO NOT run the cable plug under carpets, rugs etc.

DO NOT cover or obstruct the heater in any way. Overheating will result if it is accidentally covered.

Never immerse the appliance in water or any other liquids.

DO NOT use the appliance outdoors.

Before cleaning the appliance, unplug it from the power source and check it is cooled down.

DO NOT clean the appliance with abrasive chemicals.

Never use accessories that are not recommended or supplied by the manufacturer. It could cause danger to the user and/or damage to the appliance.

DO NOT insert or allow foreign objects to enter the inlet or outlet vents as this may result in electric shock, fire or damage to the appliance.

DO NOT install the fire using an extension cord.

Unplug from the mains supply if the appliance is not to be used for long periods.

This appliance is only suitable for well-insulated spaces or occasional use.

DO NOT use this appliance in an open flue.

2.0 Appliance data

New Forest Cube	
Supply Voltage & Rating Power	220–240V ~50Hz, 1500W
Heating Elements	1500W
Lighting	LED
Approvals	UKCA CE
Weight	Cube Stove: 95 kg / Log Store Base: 44kg
Dimensions	H 600 x W 600 x D 400 mm
Power supply cord	BS1363 / 2.1m long

See the specification sheets on page 27 for more information

Heat output	Symbol	Value	Unit
Nominal heat output	P_{nom}	1.26–1.50	kW
Minimum heat output (indicative)	P_{min}	N/A	kW
Maximum continuous heat output	$P_{max, c}$	1.38	kW
Power consumption	**Symbol**	**Value**	**Unit**
Off	P_o	0.00	W
Standby	P_o	0.38	W
Idle	P_o	0.38	W
Network standby	P_o	0.00	W
Standby mode with display information or status		No	
Seasonal Space heater energy efficiency in active mode	$\eta_{s,on}$	92.00	%

Type of heat output / room temperature control	Y/N
Single stage heat output and no room temperature control	No
Two or more manual stages, no room temperature control	No
Mechanical thermostat room temperature control	No
Electronic room temperature control	No
Electronic room temperature control plus day timer	No
Electronic room temperature control plus week timer	Yes

Other control options	Y/N
Room temperature control with presence detection	No
Room temperature control with open window detection	No
Distance control option	Yes
Adaptive start control	No
Working time limit	No
Black bulb sensor	No
Self-learning function	No
Control accuracy	No

PLEASE NOTE:
This fire is fitted with Light Emitting Diode's (LEDs) in place of conventional bulbs. LEDs generate the same light levels as conventional bulbs but, use a fraction of the energy consumed. The LED light strips are designed and tested to last 20k hours.

3.0 Component checklist

Qty	New Forest Cube Stove Components
1	Cube Stove
1	Remote control handset
2	AAA batteries for remote
1	Glass door – Sold separately
1	Flue pipe – Sold separately
1	Wall bracket – Sold separately
6	Wall plugs
6	Fixing screws
1	Log Store Base – Sold separately

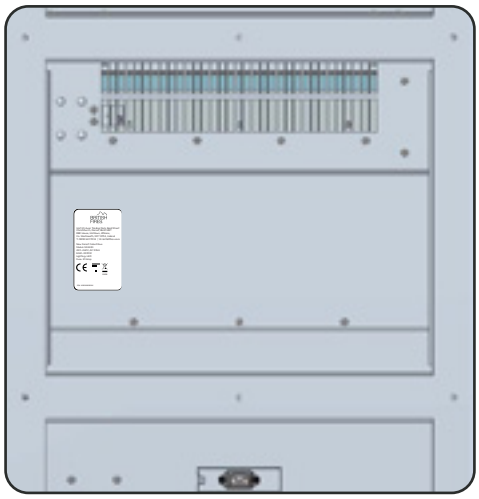

The data label provides relevant technical information, as well as, the model and serial number. This can be on the rear of the stove.

4.0 Unpacking the appliance

CAUTION:
This appliance is heavy. Always seek help whilst unpacking and/or during installation.

Please read all the instructions before continuing.

Before starting the installation of the Cube Stove, please read the following:

- The installation should be carried out by two adults to avoid injury or damage. If, for any reason, it is considered too heavy, please obtain assistance before moving the appliance.
- When lifting the electric appliance, always keep your back straight and bend from your legs. Avoid twisting at the waist upper body and top heavy bending. It is better to reposition your feet. Always bend from the knees rather than the waist. Do not lean forward or sideways while handling the appliance.
- Always grip the appliance with the palm of the hand – do not use the tips of fingers for support. Use gloves to provide additional grip.
- Always keep the appliance as close to the body as possible. This will minimise the cantilever action.
- Unpack all of the content from package and then lift the appliance gently out of the box. Place it on a flat surface with the front panel facing forward.
- Do not lift the appliance by the heater assembly outlets

5.0 Site requirements

This appliance creates warm convected air currents. These currents move heat from the room surroundings along and up the wall surfaces adjacent to the heater.

If the appliance is to be secure on a dry wall or a timber framed construction then the integrity and ability of the wall to secure the appliance must be confirmed. It is important in these circumstances that any vapour barrier and/or structural members of the house frame are not damaged.

If you are unsure of the ability of the wall to secure the appliance and/or which type of wall fixing to use, you should take professional advice and obtain the correct fixings. Alternatively, find a more suitable wall location.

DO NOT run the power supply cable under carpets.

DO NOT site where the power supply cable would become a trip hazard.

DO NOT site in a position where curtains or drapes could cover the appliance, or other soft materials could cover e.g. below a coat rack.

DO NOT site behind an opening door where mechanical impact/damage could occur.

DO NOT sit, stand or forcefully pull on the appliance.

DO NOT obstruct, cover or force items into the openings.

DO NOT use the heater to dry clothes.

DO NOT site/use in an outdoor location(s).

6.0 Appliance plug

BS1363 3-Pin Plug

These appliances are supplied with a pre-wired three pin plug and 2.1 metres of electrical cable. It is therefore necessary for a suitable electrical socket to be located within this distance and be easily accessible. The appliances are suitable for installation in static holiday/park homes. The appliances may be hard wired into a fuse spur, providing that the fuse spur is external to the installation and easily accessible, this must be carried out by a service agent or competent person, such as a qualified electrician.

WARNING:
Before enclosing the appliance, test the power in situation in order to ensure the power to the appliance working properly.

7.0 Clearances

Combustibles

The Cube Stove has no minimum clearance requirement to the floor and can be installed at any height to suit your design.

The minimum distance to the front of the appliance is 900 mm and must be clear of curtains and drapes from covering the vents.

Non-combustible shelves

If the stud wall immediately above the heater protrudes beyond the front of the appliance then the over-hanging section of the installation must be made from a non-combustible material, such as calcium silicate fireboard. 6mm thickness is the minimum advised. See Section 9.2 page 12 for more details

8.0 Preparing the appliance

Installing the Log Store Base

(Additional purchase required)

1. Remove all items from the packaging. Carefully place the log box on a flat, soft surfaced, level floor. Using at least two people, ensure the log box is installed with two clearance holes facing upwards. See Figure A.

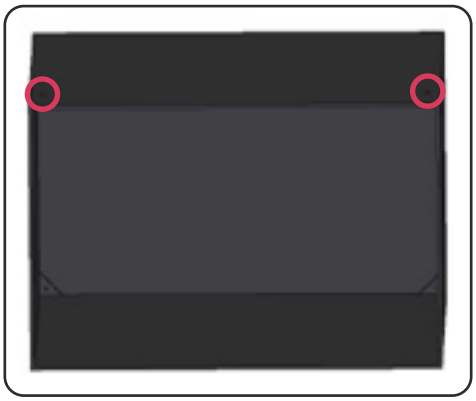

Figure A

Firebox screws

IMPORTANT:
We strongly advise that two people are used to remove the glass, both using protective gloves.

2. Using at least two people, carefully lift the body of the stove, on to the top of the log store base.

3. Looking up at the appliance, line the top holes in the log storage box up with the holes in bottom of the appliance, once aligned, screw the two toegther with the two M8 screws provided. See Figure B.

Figure B

Firebox screws

4. Insert the brackets provided into the rear of the appliance.

5. Then, with the holes in the brackets lined up with the holes in the rear of the log storage box screw the four M6 screws in to position with a cross head screwdriver. See Figure C.

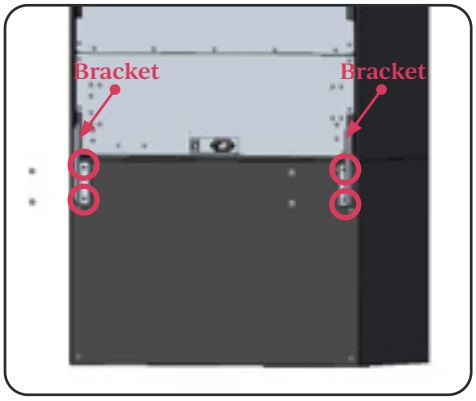

Figure C

Firebox screws

8.1 Preparing the appliance

Installing the flue pipe

(Additional purchase required)

1. Remove the flue from its packaging, position the flue collar in the top of the stove. See Figure D.

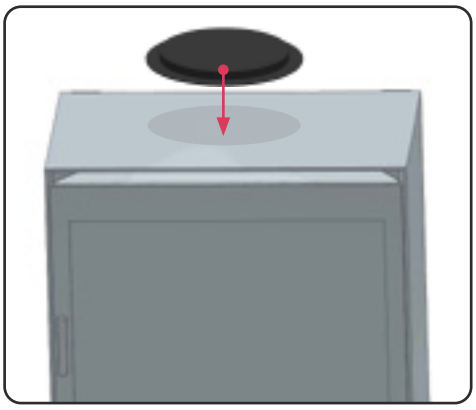

Figure D

Option 1: **Installing the vertical flue pipe**
See step two

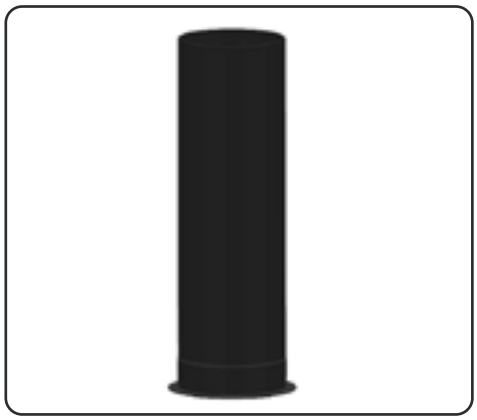

Option 2: **Installing the 90° flue pipe**
See step three

2. (For option 1) Remove the vertical flue pipe section from the packaging. Carefully, insert the end of the vertical flue pipe around the flue pipe collar on the stove and ensure the pipe is stable. See Figure E.

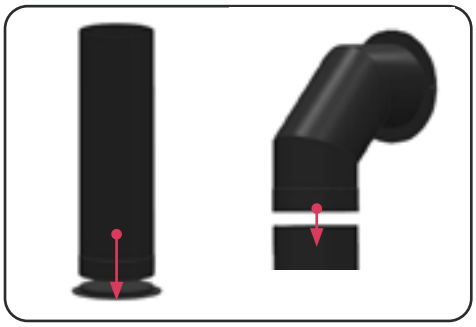

Figure E

3. (For option 2) Remove the 90° flue pipe from its packaging and carefully position it on the collar with the other end flat against the wall. See Figure F.

Figure F

8.1 Preparing the appliance

Installing the flue pipe

4. With a pencil, using the 90° flue pipe as a template, mark through the two holes on the flue pipe on to the wall. Carefully, remove the flue pipe/s from position and drill two holes using a 8mm drill bit, 40mm deep (for hard wall installations only) For plasterboard walls use an alternative fixing method. Insert the wall anchors in to the holes in the wall using a hammer. See Figure G.

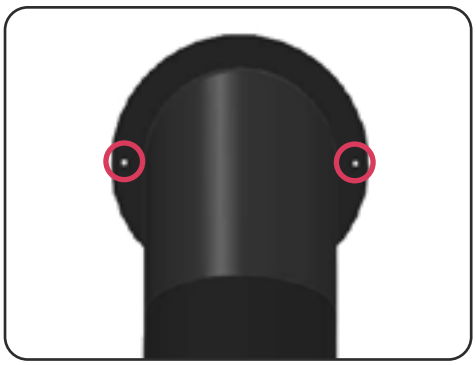

Figure G

IMPORTANT:
Make sure there are no pipes or wires before drilling into the wall.*

WARNING:
The wall that the appliances are to be installed must be capable of long-term support of the total load of the appliance. Measures should also be taken to ensure sufficient strength to withstand the force of earth-quakes, vibration and other external forces. Plasterboard alone is not considered to be a structural material. It is not recommended to rely on plasterboard fixings alone to support the weight of the appliance.

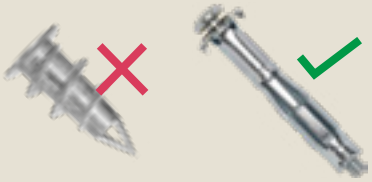

5. Carefully place the flue pipe/s back into its final position and secure the Flue Pipe to the wall by the fastenings provided into the wall anchors.

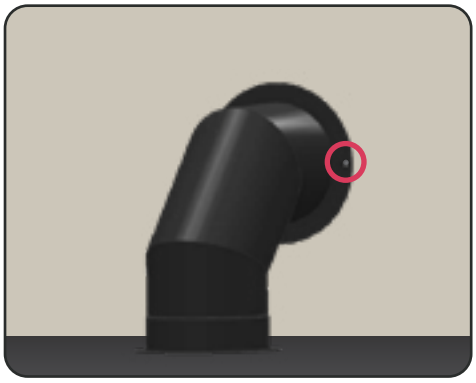

8.2 Removing and replacing the front glass

IMPORTANT:
We strongly advise that two people are used to remove the glass, both using protective gloves.

1. Carefully lift the glass up and out from the appliance. See Figure H.
2. Then, carefully install the alternative glass onto the stove.

To re-install the glass follow the instructions in the reverse order.

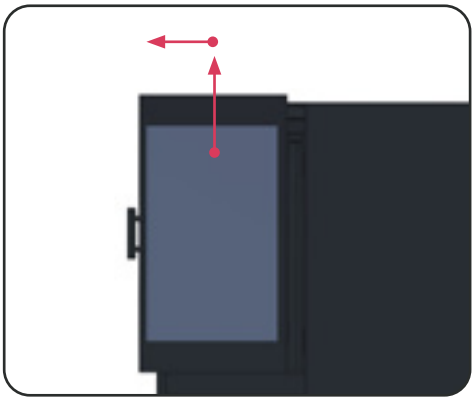

Figure H

8.3 Installing the Deluxe Real Logs

1. Carefully lift the glass up and out from the appliance. See Figure I.

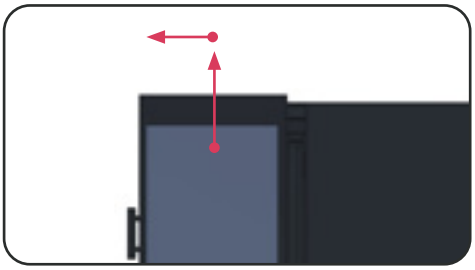

Figure I

2. To remove or insert the Deluxe Real Log fuel bed tray remove two screws on the front left and right sides with a cross-headed screw driver. See Figure J.

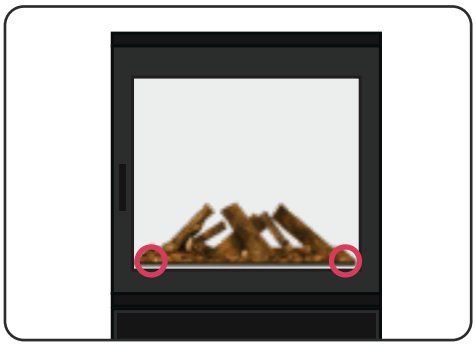

Figure J

3. Tilt the Deluxe Real Log at a ~45° angle in order to manoeuvre in and out of the stove. Handle with care! See Figure K.

To re-install the glass follow step 1 above in the reverse order.

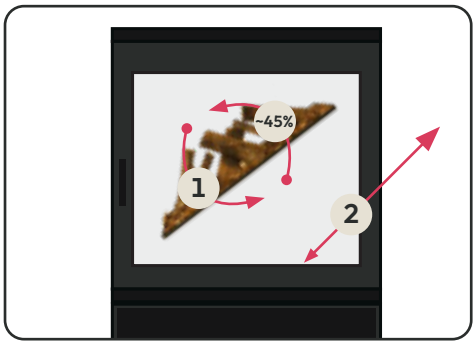

Figure K

CAUTION:
The charring on the logs will rub off so, please handle with care, and hold by the fuel bed tray as much as possible.

9.0 Installation items to note

British Fires assumes absolutely no responsibility for injuries and damages that may occur due to improper installation or handling.

- Remove all protective film coatings from the appliance surfaces, if any.
- After selecting the installation position of the appliance check the strength of the wall and wall fixings will be able to support your electric appliance.
- If the appliance will be mounted on a dry wall or a timber framed construction wall two or more wooden studs should be used, or two or more supporting wooden members of the wall, using the fixing screws provided. If this is not achievable then the wall should be strengthened using appropriate building materials.
- Use the correct, load bearing, wall plugs – not plasterboard plugs.
- Walls for installation must be vertical and flat—avoiding sloped surfaces. Installation onto anything other than a vertical wall may result in fire, damage and/or injury.
- Do not block the ventilation holes of the appliance.

British Fires assumes absolutely no responsibility for injuries and damages that may occur due to improper installation or handling.

Remove any protective film coatings from the finished/decorative surfaces of the appliance, if any.

Before finalising the installation location, check the integrity of the wall will be strong enough to support the weight of the appliance, whether installed into or against.

To ensure customer safety, be sure to design the installation so that the strength of both the wall and any wall fixings used are sufficient.

Do not block the ventilation holes of the appliance. The wall onto which the appliance/stud wall is installed must be flat. Install only on a vertical surface. Avoid sloped surfaces. Installation onto anything other than a vertical wall may result in fire, damage or injury.

If the appliance is to be mounted on a dry wall or a timber framed construction wall then efforts should be made to fix into two or more wooden studs, or supporting wooden members of the wall using the fixing screws provided. If this is not achievable then the wall should be strengthened using appropriate building materials. Ensure that the correct wall plugs are used for the type of wall that the stud work is being connected to.

Ensure the plug or fuse spur is fully accessible.

This appliance should be positioned on a firm level surface and in a clean 'dust free' environment. If fitted into an open chimney, the chimney must be blocked off to reduce the risk of draught and damp through the fire, which may cause the safety cut out system in the fan heater to operate.

IMPORTANT:
British Fires assumes no responsibility for injuries and damages that occur due to improper installation or handling.

The base opening / stud work must be able to support the full weight of the appliance.

Any protruding headers must be made of a non-combustible material. See page 12 for more details.

IMPORTANT:
Before enclosing the appliance confirm the power to the appliance is working.

Once the frame work has constructed and secured to the wall and the appliance is in its end position, ensure that there is power to the appliance before any cladding/plasterboard is installed.

9.1 Installation items – flue & chimney

If installing the New Forest Cube Stove into an existing chimney breast, the flue must be completely blocked off! Please review the instructions included with the cavity box.

If a New Forest Cube Stove is installed into an open chimney, that has been blocked off, British Fires recommends that a cavity box is used in these types of installations. Therefore, the installer can guarantee that the flue has no adverse affects on the running of the appliance.

If there is a flue pull present, this can draw the hot air from the appliances outlet, back through the appliance causing it to overheat and triggering the thermal trip switch, safely cutting the appliances heater off, resulting in an **88** error code.

If blocking the chimney completely at the fireplace level, you must leave an air gap at the top, where the flue terminates. NEVER, block off at both the top and the bottom of the flue.

To prevent moisture building up inside the flue an air vent must be installed – either internally or externally.

9.2 Overhang requirements

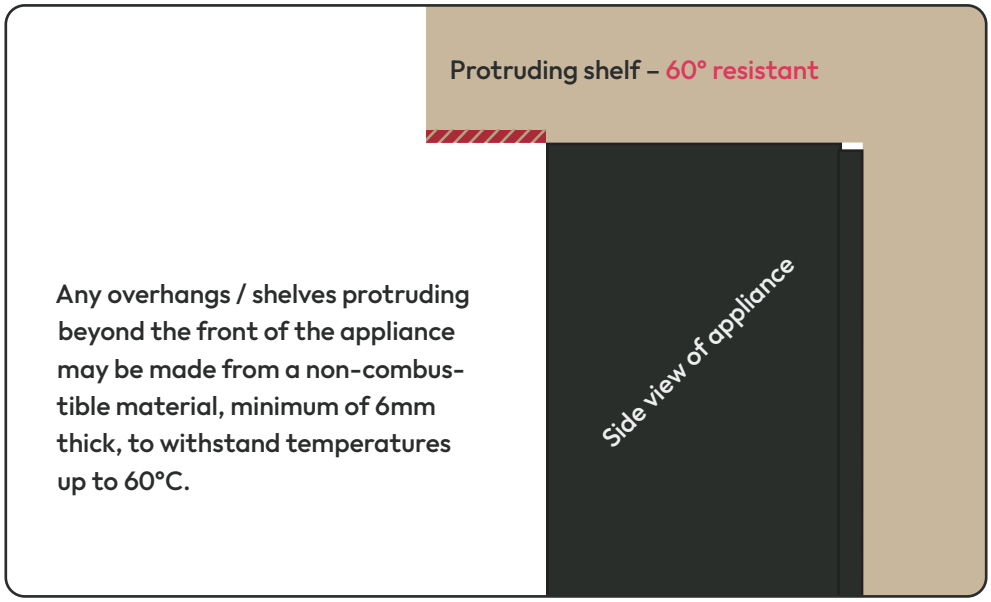

Any overhangs / shelves protruding beyond the front of the appliance may be made from a non-combustible material, minimum of 6mm thick, to withstand temperatures up to 60°C.

10.0 Installation – wall hung

(Additional purchase required)

The installation should be carried out by two physically able adults to avoid injury or damage. If it is considered too heavy, please seek assistance

1. Find the optimal place to wall mount your Cube Stove. Consider the proper position relative to the placement of furniture and windows within the room.
2. Hold the mounting bracket up to the wall to verify the correct location and ensure that the mounting bracket is level. Using the mounting bracket as a template, and a pencil, mark the holes of the bracket on the wall at the desired hanging location. See wall bracket diagram with dimensions and anchor point counts below.

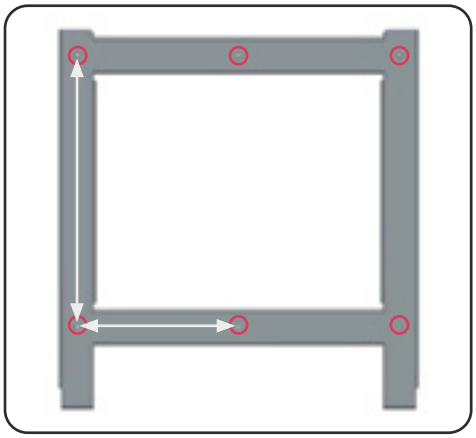

Frame Dimensions
Height: 427mm
Width: 254mm

Frame dimensions are measured on the wall bracket from hole to hole

IMPORTANT:
Make sure there are no pipes or wires before drilling into the wall.*

WARNING:
The wall that the appliances are to be installed must be capable of long-term support of the total load of the appliance. Measures should also be taken to ensure sufficient strength to withstand the force of earthquakes, vibration and other external forces. Plasterboard alone is not considered to be a structural material. It is not recommended to rely on plasterboard fixings alone to support the weight of the appliance.

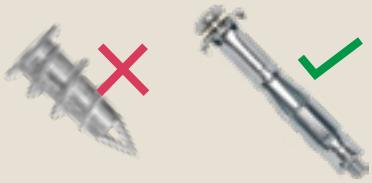

3. Drill 8 mm wide x 50 mm deep holes onto the marked points.
4. Tap the wall anchors into each of the pre-drilled holes with a hammer until they are flush with the wall.
5. Secure the bracket to the wall by screwing the wall fixing screws through the wall mounting bracket and into the wall plugs.

6. Install the appliance back onto the wall mounting bracket.
7. Using the two 4 x 12mm screws from the fixing kit, screw the mounting bracket into the bottom of the firebox. See Figure L.

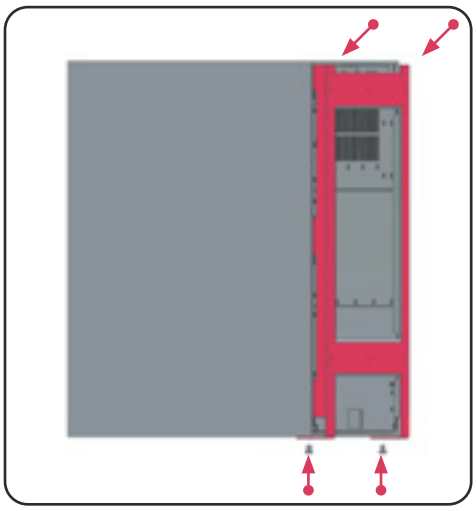

Figure L

Share your finished installation with us!

You are invited to join our social community and share your British Fires project with us online. We love to see the different styles and trends our fires work with when displayed in all their glory.

How to share your British Fires project with us

1. **Upload an image or video to showcase your finished installation.**
2. **Tag us on one of the social media sites listed below for a chance to get featured.**

facebook.com/britishfiresuk

instagram.com/britishfires (@britishfires)

tiktok.com/@britishfires

youtube.com/@britishfiresuk

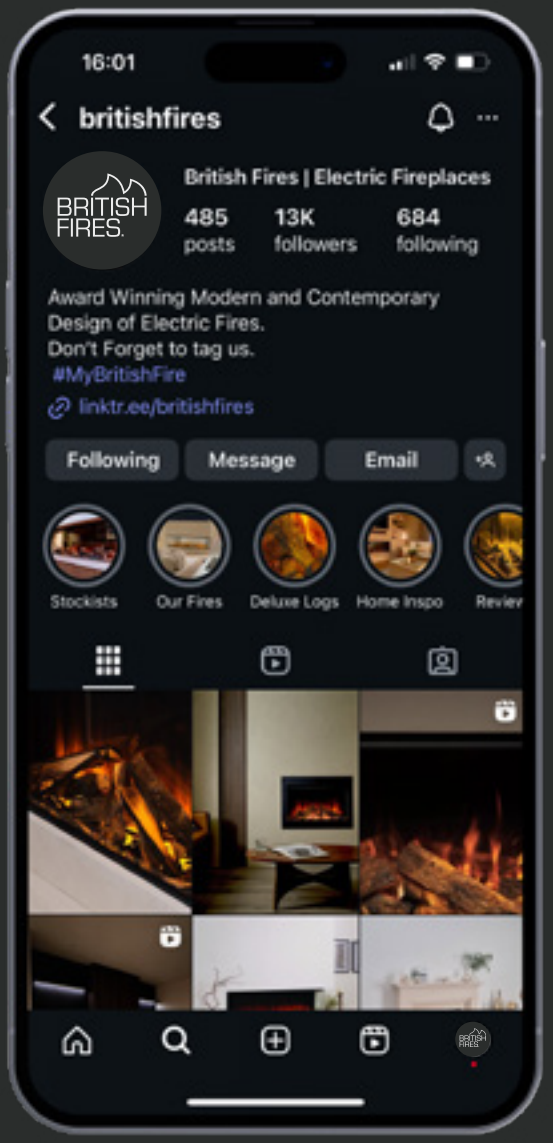

Burning like a British Fire.

User Instructions

11.0	Pairing the remote control	17
12.0	Operating the appliance	18–21
12.1	Setting the Weekly Timer	22
13.0	Safety cut-out system	23
14.0	Cleaning and maintenance	23
15.0	Troubleshooting guide	24
16.0	Spare parts	25–26
17.0	Specification sheet	27
18.0	Servicing	28

11.0 Pairing the remote control

Powering on the appliance

The ON/OFF switch is located on the rear centre of the appliance. Press the **I/O** button once to turn the fire on. The appliance will then automatically start with the flame-effect activated.

Steps to pairing remote

1. Turn the power of the appliance **ON (I)** at the main **ON/OFF** switch, located on the rear center bottom the firebox.

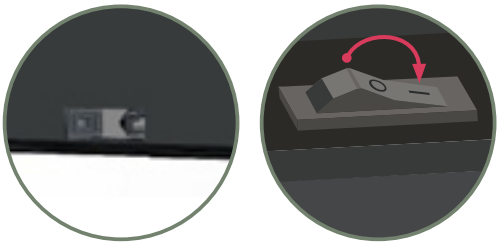

2. Within **one minute** of powering on press and hold and buttons on the remote for **three seconds** to initiate pairing.

3. The remote display will flash **bl** for **10 secs**, then return to the previous display.

4. The remote is now paired to the appliance and ready to use.

Scan to watch how the remote is paired

12.0 Operating the appliance

The ON/OFF switch is located on the rear, at the centre bottom of the appliance. Your model may require pressing the I/O button once to turn the fire on.

Remote control

The button distribution of the remote controller is as shown on the next page, and the current state information of the electric fireplace, such as the flame-effect, fuel bed, setting, temperature and time set, are all displayed remote control screen.

1. **Standby**
   Turns the appliance ON/OFF standby, the default settings are: heater set to 82°F/27°C, the main flame effect is F1, the Fuel bed is L1 (no temperature display).

2. **Flame Control**
   Changes the flame effect brightness F1, F2, F3, F4, F1 (cycle adjustment)

3. **Heater**
   The Heater button switches to the temperature adjustment option when the weekly timing function is adjusted. Then use the ⊕ and ⊖ buttons to select the desired temperature. The temperature cannot be adjusted while the daily timer control is in use. Only the heating function can be switched.

   Temperature Setting range:
   Centigrade: 17–27° Fahrenheit: 62–82°

   To change the temperature reading from Centigrade to Fahrenheit, or vice versa, Press and hold the heater button for three seconds.

4. **Fuel Bed**
   Changes the colour of the fuel bed. L1, L2, L3, L4, L1 (cycle adjustment).

5. **Sleep Timer**
   Adjusts the timer: 1H, 2H, 3H, 4H, 5H, 6H, 7H, 8H, 9H, OF, 1H (cycle).

6. **Down Lights**
   Turn the downlights ON or OFF.

7. **Time and Week Settings**
   Press to enter the time and week timer settings.

8. **Lower temperature**
   Press to lower the temperature by –1° incrementally.

9. **Raise Temperature**
   Press to raise the temperature by +1° incrementally.

10. **Date Set**
    To choose from Monday to Sunday or week timer mode option.
    Option mode: 1-2-3-4-5-6-7-A-oF.

12.0 Operating the appliance – continued

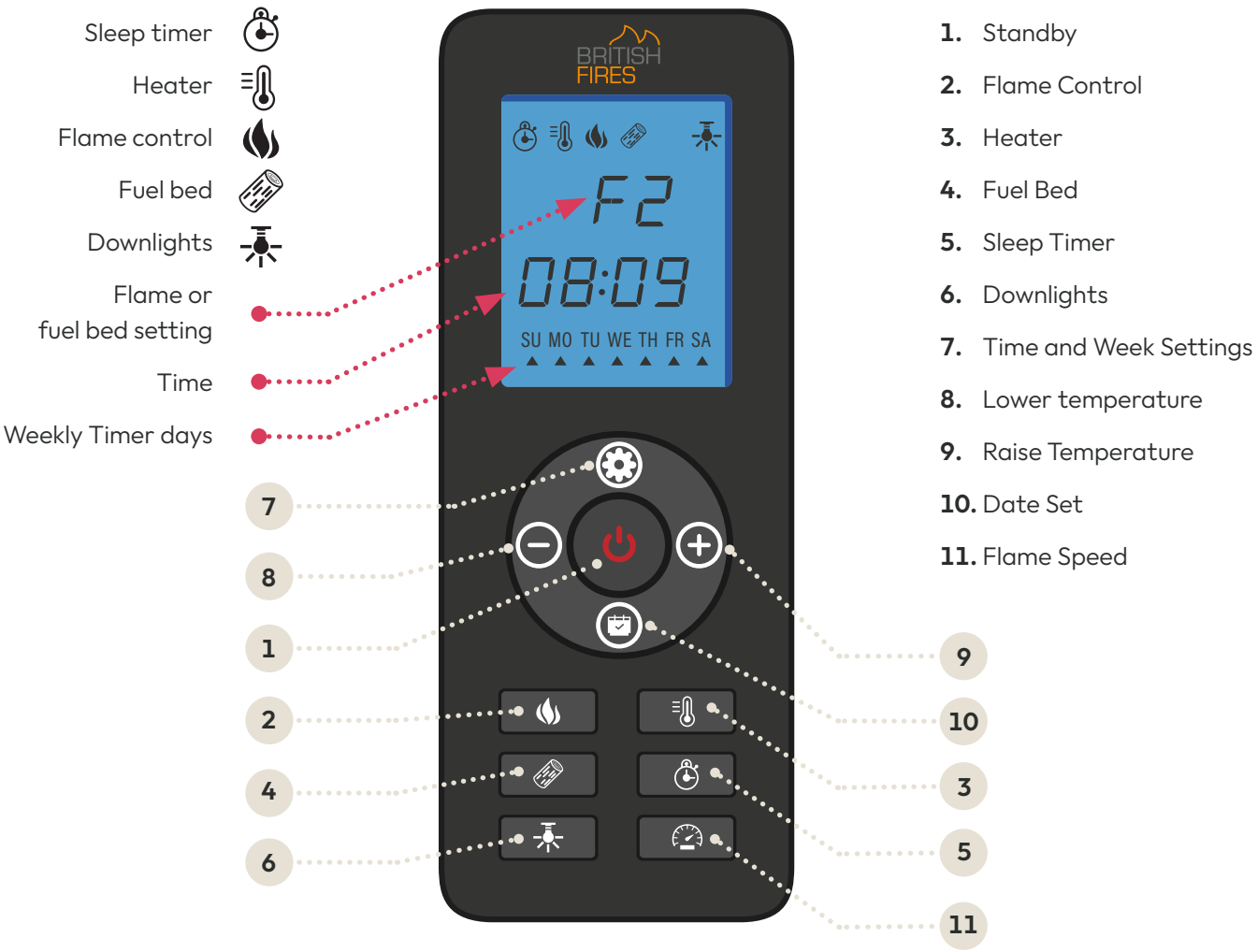

12.0 Operating the appliance – continued

Standby Button:

Turns the appliance ON and OFF.

Changing flame-effect:

When powered on, press to adjust the flame height. The icon will appear on the remote display. The flame brightness settings are as follows:

Button	Display	Flame Effect
1st Press	F1	Full
2nd Press	F2	Medium
3rd Press	F3	Low
4th Press	F4	Cycle through settings

Heating operations:

Press the to turn the heating function ON/OFF and adjust the temperature setting. The temperature is set in increments of one degree. i.e: 17°, 18°, 19°, etc.

Press and hold for three seconds to convert the temperature unit from °C to °F. The temperature display icon will flash. After the temperature is set, the display unit will flash five times and automatically save the settings then exit the setting state. After the display unit is turned on, if there is no operation within 10 seconds, the setting status is also exited.

Fan delay function:

The appliance will continue running for 15 seconds after the appliance is turned off.

Open window detection function

When the appliance is heating and the ambient temperature suddenly drops ≥5°C within 10 minutes, and the environment cannot be warmed up within 30 minutes the appliance will automatically display **OP**. The heating function will then be automatically turned off, and when the **OP** is displayed, it can be turned off and then restarted by turning off and on the appliance to clear the fault code.

This appliance has a non-self-resetting overheat protection device (thermal cut-out) which will activate if the air inlets or outlets are obstructed. For safety reasons the fire will NOT switch on again automatically.

PLEASE NOTE:
The flame-effect will remain operational if the cut-out is activated, only the fan heater is prevented from working.

The following procedure must be carried out before the fire can be operated.

1. Switch OFF the appliance at the wall socket or outlet.
2. Leave the fire OFF for at least 10 minutes. Check any obstructions are removed.
3. Switch the appliance ON at the wall then turn the appliance ON at the rocker switch. If the fire fails to operate correctly, repeat the above procedure.

Refer to **section 13.0, page 23** for more info about the Safety Cut-Out System.

12.0 Operating the appliance – continued

Fuel bed colour options:

Button	Display	Flame Effect
1st Press	L1	Orange
2nd Press	L2	Red
3rd Press	L3	Yellow
4th Press	L4	Red+Orange
5th Press	L	Red+Yellow

Once powered, press the button to change the fuel bed colour. The icon will be displayed on the remote. The colour options are as follows:

Setting sleep timer:

While the Weekly Timer is operating, press the button to adjust the time. Each press increases the duration by one hour. (You can't enter the weekly timing selection, you can only adjust the current automatic shutdown time. This function is available when the Weekly Timer function is turned on). The icon will show when in use. **Timing range:** 1H, 2H, 3H, 4H, 5H, 6H, 7H, 8H, 9H, OF(off), 1H (cycle).

Control down lighting:

Button	Display	Flame Effect
1st Press	1	Off
2nd Press	2	Medium
3rd Press	3	Full

Turns the downlights on and off. The icon will show on the remote when activated.

Setting flame speed:

Press the flame speed button to adjust the speed of the flames from fast to slow b4-b3-b2-b1.

Setting clock and timer:

Use the button to choose from Monday to Sunday or week timer mode option. Option mode:1-2-3-4-5-6-7-A-oF.

Clock setting:

1. In the standby state (after the unit is plugged in and before powering on at the appliance switch), press and hold the on the remote for three seconds, the digital display will then flash **00:00**.
2. Press + on the remote control to set the hour, press the remote control − to set the minutes.
3. Press to enter the setting of the Weekly Timer. Press to select Sunday to Saturday. The calendar icon will light up after the day is selected. When finished, press the to exit setting.

PLEASE NOTE:
The current clock must be set after the initial power-on or power-off, otherwise the clock will remain 00:00 status and setting the weekly timer function won't be possible.

Heat settings:

Use the remote control's Heater button to select the temperature. The system default parameters are: 27°C. Press + and − buttons to select the temperature when the heating is turned on. Temperature range: 16°– 27°C ; ON ; 16°C ; (Cycle).

12.1 Setting the Weekly Timer

Setting the time and days for the appliance to TURN ON

1. While in the standby state, press the button on the remote for three seconds to enter the Weekly Timer Mode 1 (of 7). In **mode 1**, the display reads: **1 ON**, the clock reads: **01:00**, press ⊕ to set the hour, press ⊖ to set minute for the appliance to automatically turn on. Then press to set the day(s) of the week for the appliance to turn on at the set time. Every press on the will jump through SU, MO, TU, WE, TH, FR, SA and flash in turn. Press ⊕ to select or de-select the desired day of the week – the ▲ indicates the selected days. Press the button to enter the temperature setting, then press the ⊕ and ⊖ button to set temperature.

IMPORTANT:
The clock on the remote must be set before programming any weekly timer functions.

Setting the time and days for the appliance to TURN OFF

2. Press to set the OFF time – the display reads: **1 OFF** and the clock states: **02:00**. Then, press ⊕ to set hour and press ⊖ to set the minute for the appliance to automatically turn off. The date of the timer OFF is the same as the timer ON and can't be changed manually. After setting, press to enter the setting of **mode 2**, which operates the same as mode 1. You can set Mode 2 through 7 with steps 1 and 2. Press and hold or on the remote for three seconds to save the setting and exit Weekly Timer setting.

3. After the preset timing on/off switch, you can use the clock/timer button to select the desired timing mode 1–2–3–4–5–6–7– auto option, after the option shows five seconds without any operation, it will save the selected option and enter the current setting of the option, the timer icon will display and automatically run the preset timer program. You can individually select each setting of modes 1–7 for automatic on/off modes, or you can preset the desired settings, and then select **auto mode** for multiple preset series programs.

4. To set the ON/OFF mode and temperature setting for different periods of the week, then set the switching time and temperature of each day from Sunday to Monday in mode 1–7. After setting, use the **auto mode** to run the ON/OFF programs and the system will run each of the Weekly Timer modes 1–7. It is possible to set modes 1–7 within one day by using the **auto mode** to run ON/OFF programs within one day.

IMPORTANT:
Be aware that when you use auto mode, you need to make sure the settings of times doesn't overlap each other, otherwise the timer will not operate.

5. After entering the Weekly Timer setting, press and hold the button for three seconds to exit the Weekly Timer mode. The timer icon will be removed. The timer settings (1–7) can be reviewed by pressing the button.

For example: press to display (**1 ON** / **01:00** / **27°C**), then press again to display (**1 OFF** / **02:00** / **27°C**). Press the button once more to display (**2 ON** / **03:00** / **26°C**). Press again to display (**2 OFF** / **13:00** / **27°C**). So, and so forth, to view the other programmed modes.

PLEASE NOTE:
It can be helpful to make note of the programmed ON/OFF times and temperatures if dealing with multiple weekly timer settings.

The remote control must be kept within four meters of the appliance. This will prevent losing connection and causing the remote or appliance to fail due to the distance being exceeded when operating the Weekly Timer. After the Weekly Timer is turned on, the remote automatically initiates the pre-programmed ON/OFF times and temperature settings.

13.0 Safety cut-out system

When the appliance will be cut-out

PLEASE NOTE:
During the cut-out test the fire will automatically display '88'.

This appliance has a non-self-resetting overheating protection device (thermal cut-out) which will activate if the air inlets or outlets are obstructed. For safety reasons the fire will NOT switch on again automatically.

How to reset the appliance to switch back on

The following procedure must be carried out before the fire can be operated again:

1. Switch OFF the appliance at the wall socket or outlet. Leave the fire OFF for a period of no less than 10 minutes, ensuring all obstructions are removed.
2. Switch the appliance to ON at the wall outlet.
3. Turn the appliance ON at the rocker switch, located front top right of the firebox.

What to do if the appliance fails to switch back on

If the fire fails to operate correctly, repeat steps one and two. If an attempt to switch on the appliance is made before the safety cut-out has reset, the appliance may cut-out for a further period of time.

PLEASE NOTE:
The flame-effect will remain in operation if the safety cut-out is activated. Only the fan heater will be prevented from working.

If the sequence has been followed correctly and the appliance still fails to function, check the fuse in the wall outlet. If this is not the cause, call an electrician or maintenance engineer.

14.0 Cleaning and maintenance

CAUTION:
Disconnect the appliance from the main power supply before cleaning or maintenance!

For general cleaning, use a soft clean duster or wiping with a dry cloth is normally sufficient. Never use harsh abrasives or cleaners as they can damage the finish. Other than regular cleaning of dust, there are no specific requirements for care.

Make sure the heater outlet and inlet grille (located on the top, front, centre of the appliance) is kept clear of dust, pet hair, and other airborne household debris. This should be periodically vacuum-cleaned with a soft bristle attachment.

The glass panel should be cleaned carefully with a soft cloth. Remove the front glass pane to access inside of the pane. Please refer to **section 8.2 on page 9** to follow the steps. We recommend any cleaning agents designed for glass-use only.

Handset Battery Replacement

The remote control requires two AAA 1.5V batteries

1. Remove the battery cover and used batteries and replace with two new AAA batteries of the same kind. Insert as indicated on the device.
2. The remote will need to be repaired to the appliance. Refer to **section 11.0 Pairing The Remote Control on page 17**.

15.0 Troubleshooting guide

My New Forest Electric Fire...		Remedy
is not switching on		Ensure mains switch is on.
is not emitting any heat		The fire is fitted with an energy saving thermostat. If the temperature in the room is higher than the temperature selected on the fire, then the thermostat will stop the heater from turning on. For example, if the room temperature is 22°C or above and the fires heater is set at 22°C, then the heater will not be required until the room temperature drops below 22°C. If this is the case select a higher temperature setting than the room's temperature and the heater will begin to operate. The safety cut-out may have been operated. Switch the appliance off, leave for 10 minutes then switch back on.
shuts off after a period of time		Check the temperature is not set on a lower setting. If the room is warm enough the thermostat will stop the heat from switching on. Check that the air inlet/outlet is not blocked. Check that the window detection sensor has not been activated.
Display panel shows	**88**	There is a fault with the heater. Check that the temperature is not set onto the lower settings. If the room is warm enough the thermostat will stop the fire switching the heat on. Check that the air vent are not blocked off.
	EE	There is an electrical fault. A service engineer will need to check the thermostat for any loose connections.
	OP	The open Window Detection function is in operation, this operates when the appliance is heating and the ambient temperature suddenly drops ≥5°C within 10 minutes, and the environment cannot be warmed up within 30 minutes, resulting in the appliance automatically displaying **OP**. The heating function will then be automatically turned off, and when the **OP** is displayed, it can be turned off and then restarted by turning off and on the appliance to clear the fault code.

16.0 Spare parts

Item #	Part #	Part Name	QTY
1	F960661	Front Panel – Steel	1
2	F960662	Front Panel – Glass	1
3	F960663	Fuelbed Tray	1
4	F960664	Frosted Fuelbed	1
5	F960665	Wall Mounting Bracket	1
6	F960666	IEC Mains Cable	1
7	See Figure M	Fuelbed Rotisserie Assembly	1
8	See Figure N	Flame Effect Rotisserie Assembly	1
9	See Figure O	Heater Assembly	1

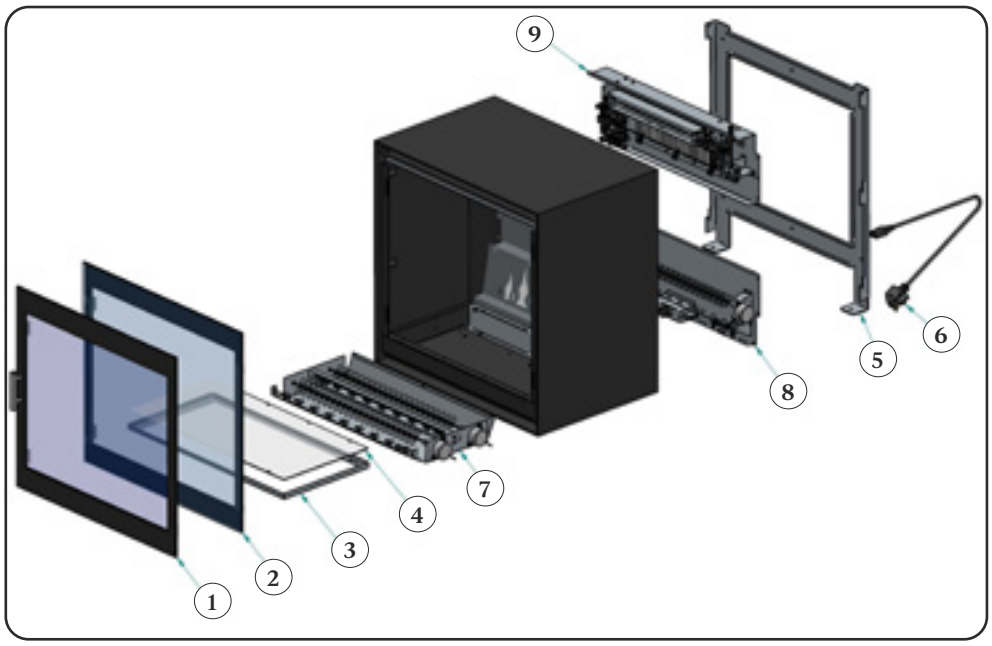

Item #	Part #	Part Name	QTY
10	F960667	Fuelbed LED	1
11	F960668	Rotisserie Motor	1

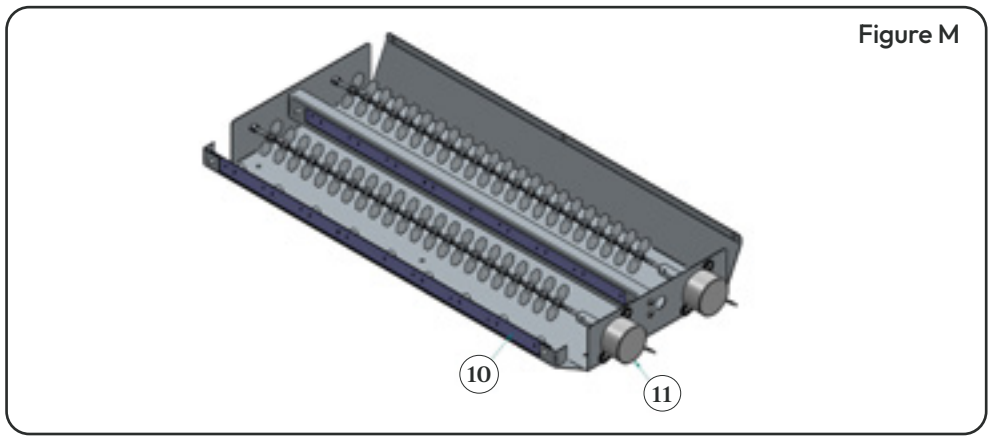

Figure M

16.0 Spare parts

Item #	Part #	Part Name	QTY
12	F960674	Flame Effect LED	1
13	F960675	IEC Connector	1
14	F960676	Isolator Switch	1
15	F960668	Rotisserie Motor	1
16	F960666	IEC Mains Cable	1

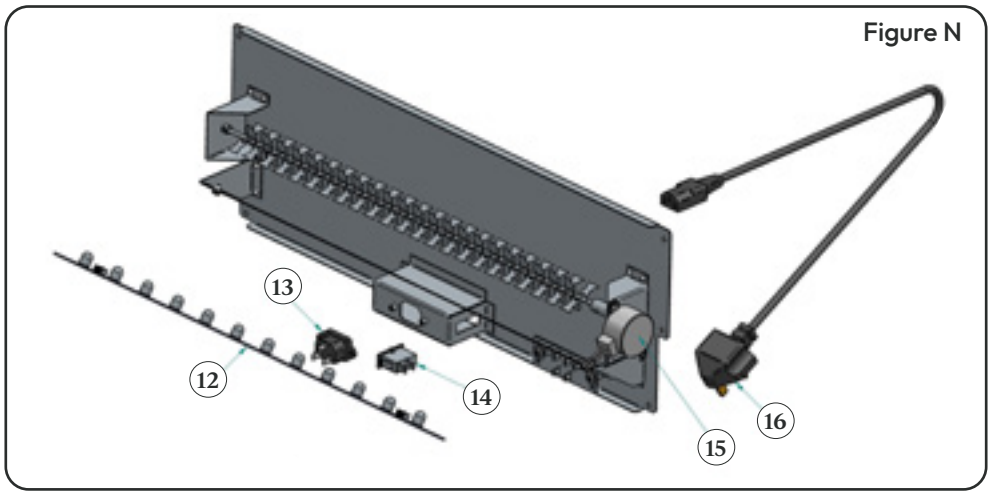

Figure N

Item #	Part #	Part Name	QTY
17	F960669	PCB	1
18	F960673	Fan & Heater Element	1
19	F960670	NTC Thermostat	1
20	F960671	Error Display Panel	1
16	F960672	Remote Receiver	1

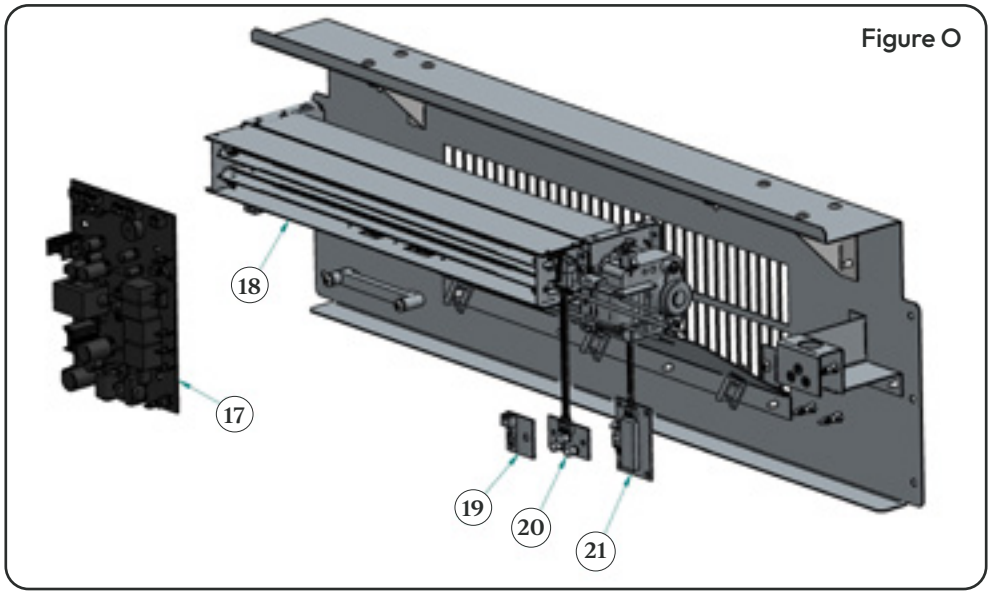

Figure O

17.0 Specification sheet

Dimensions

A ..... 600.0 mm

B ..... 400.0 mm

C ..... 22.0 mm

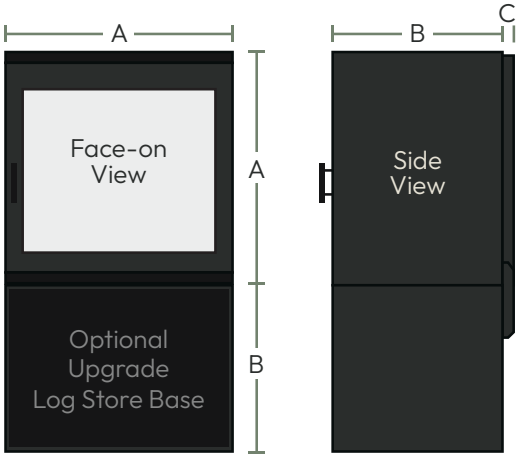

New Forest Cube Stove Features

Freestanding or wall-hung installation

Flame speed control

Remote control

Full thermostatic control

Timer control options

Downlighting

Five fuel bed colours
(red, orange, yellow, red+orange, red+yellow)

Tech Specs

Supply voltage ..... 220–240V AC

Rating power 50Hz

Heat output 1500W

Lighting ..... LED

Certification ..... UKCA, CE

Black Edition Features

Deluxe Real Logs

Rear Black Glass

Upgrade Options

Black Glass Door

Flue Pipe

Log Store Base

Wall Mounting Bracket

18.0 Servicing

Mains lead wiring

The mains lead wires are coloured as indicated in the following table:

Blue/Black	Neutral
Brown/Red	Live
Green/Yellow	Earth

WARNING:
Never connect Live or Neutral wires to the Earth terminal of the plug.

If the colours of the wires in the mains lead of this appliance do not correspond with the colour markings in the terminals of your plug then please proceed as follows: The blue wire must be connected to the terminal marked with an **N** or coloured black. The brown wire must be connected to the terminal marked with an **L** or coloured red. The green/yellow wire must be connected to the earth terminal which is marked with an **E** or with the earth symbol.

PLEASE NOTE:
If a moulded plug is fitted and has to be removed take great care in disposing of the plug and severed cable, it must be destroyed to prevent engaging into a socket. Refer to Section 2.0, Appliance Data for appliance specification. Use only genuine manufacturers spare parts available from your supplier.

19.0 Terms & conditions, guarantee

Scan the QR code below to register your appliance.

Automatic 1-year Guarantee

We offer a standard one-year guarantee on every electric appliance.

Register for the Free 3-year Guarantee

To cover your appliance for a further two years, free registration is required on our website at www.britishfires.com/guarantee. Full guarantee terms & conditions are available to view at **www.britishfires.com**.

5-Year Guarantee Upgrade

If you have purchased a 5-Year Guarantee upgrade there will be a card in the packaging with a unique code. Enter that, with all of the other information requested at **www.britishfires.com/guarantee** to validate the guarantee upgrade.

Terms & Conditions

All appliances must be installed in a correctly ventilated space in accordance with the manufacturer's installation instructions and the rules in force. All of our fires carry UKCA & CE Approval. April 2026 British Fires®. For full terms and conditions, please visit our website.

1. For any claim to be made within three years from date of purchase you will be required to provide and supply your original proof of purchase.
2. All appliances must have been installed and operated in accordance with the manufacturer's instructions.
3. Purchase(s) must be made through an authorised stockist/retailer.

Deluxe Real Logs are not covered by the 3- or 5-year guarantee.

During the guarantee period any appliance or component which is proven to be faulty or defective in manufacture, will be repaired or replaced free of material and labour charges, providing that we have authorised or carried out the repair or replacement.

We will not accept or reimburse the costs of any third-party who undertakes any work carried on the appliance or fits parts, unless we have approved such work in advance of it being carried out.

The guarantee period will not be extended under any circumstances.

Making a claim:

If you wish to make a claim under our guarantee and all the terms and conditions for your appliance have been met then please submit the details requested below to: Guarantee@britishfires.com

Details required:

1. Name, Address & Contact phone number.
2. A copy of your proof of purchase (e.g. receipt or bank statement). Please note, that this does not affect your statutory rights.
3. Brief description of the issue and supporting images, if possible.

Notes

Notes

Nothing like a British Fire.

This product complies with conformity requirements of the applicable UK Regulations.

This product complies with conformity requirements of the applicable European Regulations or Directives.

This product complies with conformity requirements of the applicable European Regulations or Directives.

British Fires®
Unit 10 Avon Trading Park
Christchurch, Dorset
BH23 2BT, United Kingdom

RBK House
Irishtown, Athlone
Co. Westmeath
N37 XP52, Ireland

T: 0808 169 9911
W: britishfires.com
E: sales@britishfires.com

Models covered by these instructions:

New Forest Cube Stove (SK6181)

This appliance is only suitable for well insulated spaces or occasional use.

Please note: Except where otherwise stated, all rights, including copyright in the text, images and layout of this booklet is owned by British Fires.

You are not permitted to copy or adapt any of the content without the prior written permission of British Fires.

All instructions must be handed to the user for safekeeping.

© 2026 British Fires®

Revision A – 04/26 | Part Number: F861723